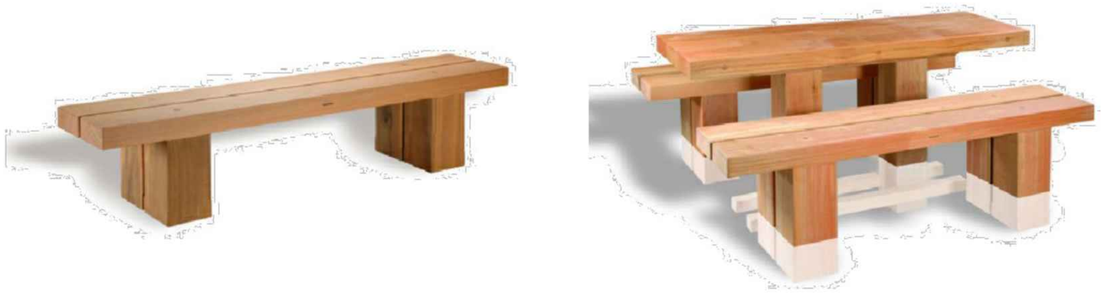

TYPICAL FURNITURE FOR WOODLAND SETTING

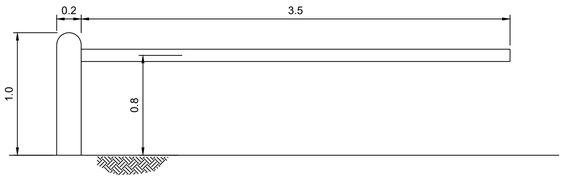

TYPICAL SINGLE LOW BARRIER DETAIL

Scale 1:25

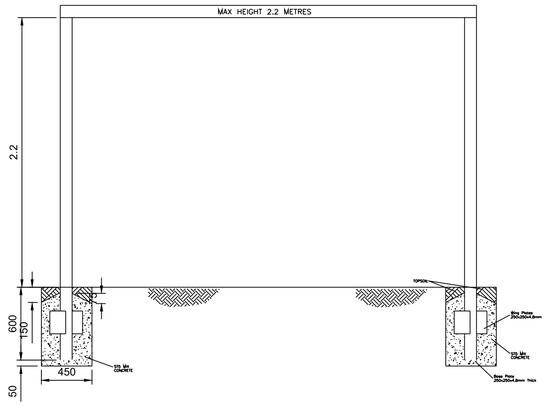

TYPICAL HEIGHT RESTRICTION DETAIL

Scale 1:25

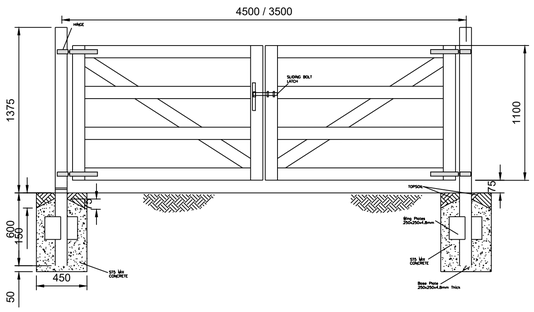

TYPICAL ACCESS GATE DETAIL

Scale 1:25

If Applicable : Ordnance Survey Ireland Licence No. CYAL50221678 © Ordnance Survey Ireland and Government of Ireland
OSI 3501 3502 3550 3551 3552 3553 3599 3600 3601 3655 3656 3657

FEHILY TIMONEY
Cork | Dublin | Carlow
www.fehilytimoney.ie

No part of this document may be reproduced or transmitted in any form or stored in any retrieval system of any nature without the written permission of Fehily Timoney & Company as copyright holder except as agreed for use on the project for which the document was originally issued. Do not scale. Use figured dimensions only. If in doubt - Ask!

Rev.	Description	App By	Date
A	ISSUE FOR PLANNING	JH	15.09.25

PROJECT DERRYNADARRAGH WIND FARM	CLIENT Dara Energy Limited		
SHEET RECREATION AMENITY DETAILS	Date 15.09.25	Project number P22-145	Scale (@ A1-) As Shown
	Drawn by CS	Drawing Number P22-145-0500-0011	Rev A
	Checked by LD		

O:\ACAD\2022\P22-145\P22-145-0500-0011

16 September 2025